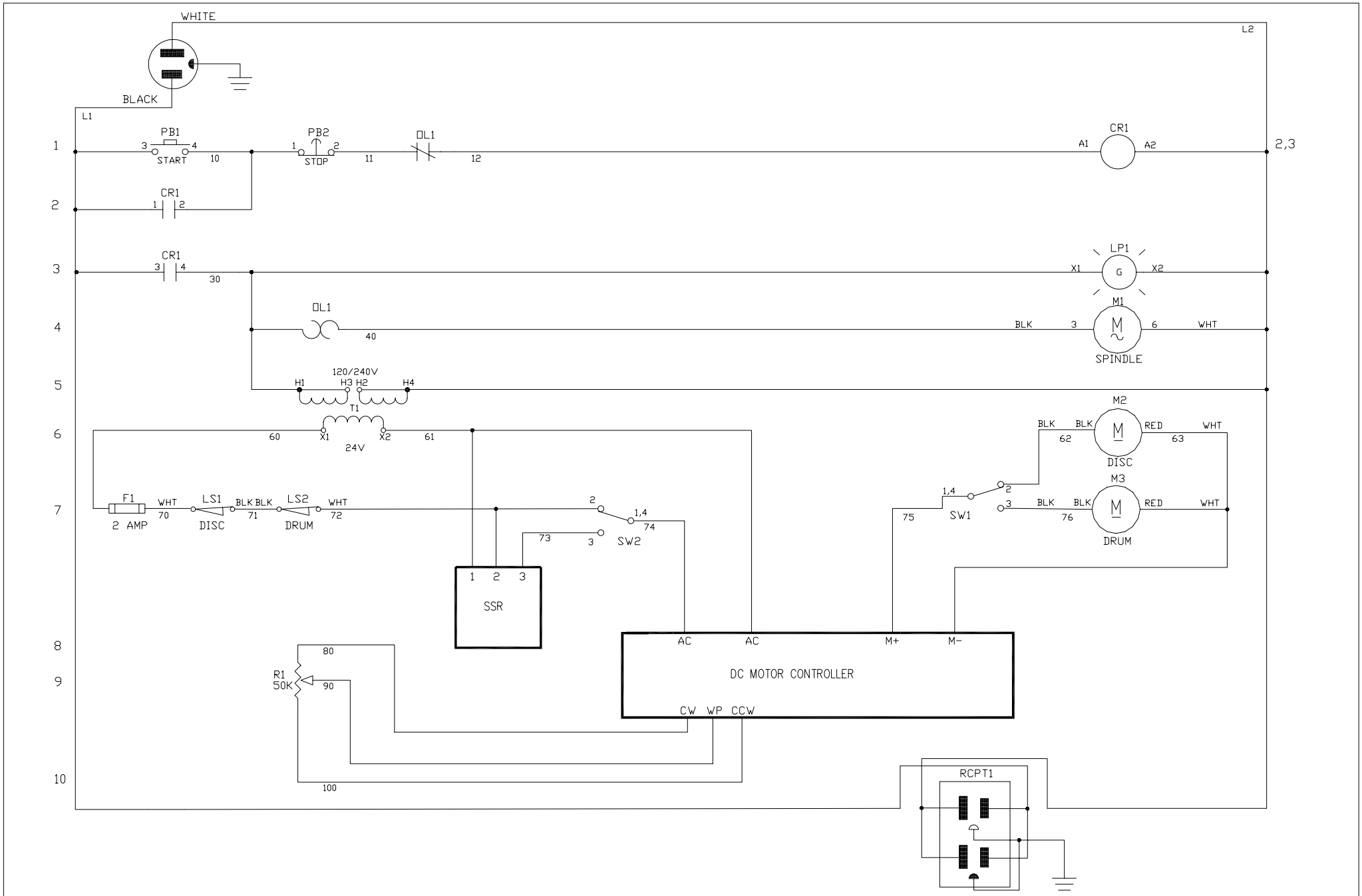

REV	DATE	DESCRIPTION

RTI TECHNOLOGIES, INC.
YORK, PENNSYLVANIA

CONTROL BOX SCHEMATIC
BRC550 LATHE

MATERIAL
FINISH
DRAWN BY E. I. SHULTZ 10-20-97
DOC. # 560-80116-00